PURE WHITE LINES

EST. 2012

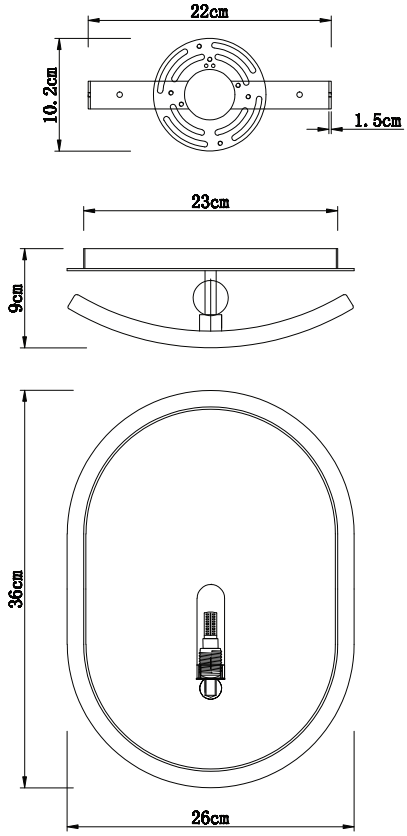

Mosman Bronze Curve Wall Sconce

Technical Specification Sheet

Dimensions excluding rose & chain (cm)	W	D	H
	25	9	36

Weight	4.8 kg
Product code	PWL11142
Materials	Alabaster, Bronze Plated Iron
Finish	Bronze Plated Iron
Available Colours	White
IP Rating	IP44
Suitable for dimming	Yes - dimmable bulb is required
Max wattage	60W

Bulb requirements	1 bulb, G9 (not included)
Packaging dims	L:46CM D:31CM H:36CM
Packaging weight	4.8 kg
Assembly required	Partial
Care advice	Dust with lint free cloth

UK: purewhitelines.com | sales@purewhitelines.com | +44 (0) 20 3376 0273
EU: purewhitelineseurope.com | sales@purewhitelineseurope.com | +32 3808 0298